This article was downloaded by: *[University of Chicago]*
On: *8 October 2008*
Access details: *Access Details: [subscription number 791985096]*
Publisher *Taylor & Francis*
Informa Ltd Registered in England and Wales Registered Number: 1072954 Registered office: Mortimer House, 37-41 Mortimer Street, London W1T 3JH, UK

High Pressure Research
Publication details, including instructions for authors and subscription information:
http://www.informaworld.com/smpp/title~content=t713679167

HPCAT: an integrated high-pressure synchrotron facility at the Advanced Photon Source

Guoyin Shen [a]; Paul Chow [a]; Yuming Xiao [a]; Stanislav Sinogeikin [a]; Yue Meng [a]; Wenge Yang [a]; Hans-Peter Liermann [a]; Olga Shebanova [a]; Eric Rod [a]; Arunkumar Bommannavar [a]; Ho-Kwang Mao [a]
[a] HPCAT, Geophysical Laboratory, Carnegie Institution of Washington, Argonne, IL, USA

Online Publication Date: 01 September 2008

To cite this Article Shen, Guoyin, Chow, Paul, Xiao, Yuming, Sinogeikin, Stanislav, Meng, Yue, Yang, Wenge, Liermann, Hans-Peter, Shebanova, Olga, Rod, Eric, Bommannavar, Arunkumar and Mao, Ho-Kwang(2008)'HPCAT: an integrated high-pressure synchrotron facility at the Advanced Photon Source',High Pressure Research,28:3,145 — 162

To link to this Article: DOI: 10.1080/08957950802208571

URL: http://dx.doi.org/10.1080/08957950802208571

PLEASE SCROLL DOWN FOR ARTICLE

Full terms and conditions of use: http://www.informaworld.com/terms-and-conditions-of-access.pdf

This article may be used for research, teaching and private study purposes. Any substantial or systematic reproduction, re-distribution, re-selling, loan or sub-licensing, systematic supply or distribution in any form to anyone is expressly forbidden.

The publisher does not give any warranty express or implied or make any representation that the contents will be complete or accurate or up to date. The accuracy of any instructions, formulae and drug doses should be independently verified with primary sources. The publisher shall not be liable for any loss, actions, claims, proceedings, demand or costs or damages whatsoever or howsoever caused arising directly or indirectly in connection with or arising out of the use of this material.

High Pressure Research
Vol. 28, No. 3, September 2008, 145–162

Taylor & Francis
Taylor & Francis Group

HPCAT: an integrated high-pressure synchrotron facility at the Advanced Photon Source

Guoyin Shen*, Paul Chow, Yuming Xiao, Stanislav Sinogeikin, Yue Meng, Wenge Yang, Hans-Peter Liermann, Olga Shebanova, Eric Rod, Arunkumar Bommannavar and Ho-kwang Mao

HPCAT, Geophysical Laboratory, Carnegie Institution of Washington, Argonne, IL, USA

(*Received 31 March 2008; final version received 7 May 2008*)

The high pressure collaborative access team (HPCAT) was established to advance cutting edge, multidisciplinary, high-pressure (HP) science and technology using synchrotron radiation at sector 16 of the Advanced Photon Source of Argonne National Laboratory. The integrated HPCAT facility has established four operating beamlines in nine hutches. Two beamlines are split in energy space from the insertion device (16ID) line, whereas the other two are spatially divided into two fans from the bending magnet (16BM) line. An array of novel X-ray diffraction and spectroscopic techniques has been integrated with HP and extreme temperature instrumentation at HPCAT. With a multidisciplinary approach and multi-institution collaborations, the HP program at the HPCAT has been enabling myriad scientific breakthroughs in HP physics, chemistry, materials, and Earth and planetary sciences.

Keywords: high-pressure synchrotron facility; X-ray diffraction; X-ray spectroscopy; diamond anvil cell

Downloaded By: [University of Chicago] At: 18:52 8 October 2008

1. Introduction

High-pressure (HP) research has been an important component in modern synchrotron facilities. Brilliant and small synchrotron beams provide excellent probes for miniature HP samples in various X-ray measurements [1–3]. HP experiments at synchrotron sites have led to many new discoveries and revealed numerous phenomena that are of fundamental importance in multidisciplinary physical sciences, including astrophysics, planetary science, condensed matter physics, chemistry, crystallography, geophysics, geochemistry, materials science, and bioscience, see for *e.g.* [4,5]. Ever smaller and more complex samples at increasingly higher pressures and more extreme temperatures are being studied with higher accuracy probes for characterization of structural [6], electron [7], and phonon properties [8]. Many previous technical limitations in capability, precision and accuracy are being removed through optimization of X-ray source, X-ray optics, sample environment, experimental configuration, and detectors and analyzers [1–3]. In this paper,

*Corresponding author. Email: gshen@ciw.edu

ISSN 0895-7959 print/ISSN 1477-2299 online
© 2008 Taylor & Francis
DOI: 10.1080/08957950802208571
http://www.informaworld.com

we describe an integrated HP synchrotron facility developed at the high pressure collaborative access team (HPCAT) at the Advanced Photon Source (APS).

Multiple optimized synchrotron X-ray diffraction (XRD) and X-ray spectroscopy (XRS) probes, as well as complementary non-synchrotron probes, have been developed at HPCAT. The basic design criteria of the HPCAT facility are:

Science driven. Techniques are chosen for their maximum impact to the multidisciplinary HP sciences.

Optimized for HP vessels. The X-ray energy, energy resolution, focus size, intensity, background discrimination, detector configuration, etc. are optimized for HP vessels and samples in HP and extreme temperature environments.

Integration and compatibility. We are keenly aware of the merits of the single synchrotron technique concept that has been commonly adopted at many synchrotron beamlines. A prudent approach is taken to ensure that the multiple techniques at each station of HPCAT are indeed compatible and can be integrated to enhance the common scientific goal.

Uncompromised synchrotron techniques. We also ensure that the above described optimization and integration are accomplished without compromising the accuracy and sensitivity of each individual technique in comparison to the same measurements conducted at state-of-the-art, single-technique beamlines.

The following is a list of developed HP synchrotron techniques currently operational at HPCAT:

HP X-ray scattering
- Inelastic scattering, X-ray Raman (bonding, charge dynamics)
- Nuclear resonant inelastic scattering (phonon dynamics)
- Nuclear forward scattering (NFS) (Mössbauer effect, spin, valence state)

HP XRS
- (Resonant) Emission spectroscopy (spin, electronic structure)
- Absorption spectroscopy (bonding, local structure)

HP XRD
- Micro angular dispersive X-ray diffraction (ADXD) ($\Delta d/d \sim 10^{-3}$)
- Micro energy dispersive X-ray diffraction (EDXD) ($\Delta d/d \sim 10^{-2}$)
- High resolution XRD ($\Delta d/d \sim 10^{-4}$)
- Single crystal XRD
- Anomalous diffraction/scattering (element specific information).

The powerful probes at HPCAT enable users to tackle numerous scientific problems in multidisciplinary fields [9], covering topics from fundamental physics (novel states of matters, phase transition mechanism, and dynamic processes), fundamental chemistry (chemical bonding and chemical reactivity), materials science (novel materials, hydrogen storage, and bio-materials), and Earth and planetary sciences (mineral physics and deep mantle geochemistry).

2. HPCAT beamlines

2.1. *Sector overview*

The HPCAT sector is located at sector 16 of APS, and consists of an insertion device undulator beamline (16-ID), a bending magnet beamline (16-BM), two support laboratories and an office area. The HPCAT design and construction effort began in 1998. A detailed technical design of

Downloaded By: [University of Chicago] At: 18:52 8 October 2008

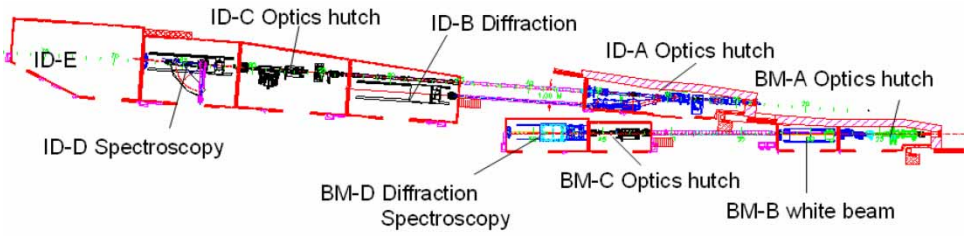

Figure 1. HPCAT layout at sector 16 at the APS. Four simultaneously running beamlines are established in nine hutches. HP instrumentations in each beamline are described in this paper.

the sector layout and an optical scheme were completed in 2000. The construction of optical enclosures and experimental stations began in April 2001. The first X-rays were observed from 16-ID in March 2002 and from 16-BM in June 2003. The remaining stations in the ID and BM beamlines were commissioned in the period 2003–2006. The first HPCAT experiment was conducted at the end of 2002. 16-ID and 16-BM have been open to general users since 2003 and 2006, respectively.

The HPCAT beamlines consist of nine X-ray optics and experimental stations, five for the ID line: (sequentially downstream) 16ID-A, 16ID-B, 16ID-C, 16ID-D, 16ID-E, and four for the BM line: 16BM-A, 16BM-B, 16BM-C, and 16BM-D (Figure 1). To increase the efficiency of precious beam time utilization, a maximum of four beamlines are simultaneously operated at 16ID-B, 16ID-C-D-E, 16BM-B, and 16BM-C-D. We have used a diamond double-crystal monochromator (DCM) to vertically diffract a monochromatic segment of the X-rays at 16ID into the 16ID-C-D-E stations for full time HP scattering and spectroscopy studies, and a branching DCM to horizontally diffract the transmitted X-ray beam (at a higher energy) to the 16ID-B station for full time HP XRD studies, thus creating two simultaneously operating ID lines. In 16-BM, the 6 mrad white radiation fan is divided into two parts: one into 16BM-B for HP white beam X-ray studies and the other into 16BM-C-D for HP micro XRD and X-ray absorption spectroscopy (XAS). Both white beam and monochromatic beam are available at the 16BM-D station.

Downloaded By: [University of Chicago] At: 18:52 8 October 2008

2.2. *Undulator beamlines*

APS undulator type-A is used at 16-ID beamline at HPCAT, which provides a highly brilliant X-ray source of $9(\mathrm{v}) \times 275(\mathrm{h})\,\mu\mathrm{m}^2$ in size and $3(\mathrm{v}) \times 12(\mathrm{h})\,\mu\mathrm{rad}$ in divergence [10]. The small source size and low divergence offers extraordinary X-ray focusing capabilities. Because of small sample dimensions in HP experiments, an intense and highly focused X-ray probing beam is critical.

Undulator spectroscopy beamline. Particular attention needs to be taken in HP spectroscopy experiments for maximizing flux on the sample due to the small inelastic scattering cross-sections, maintaining energy and position stability over long period of time, and, as we scan or change the energy of the incident beam by the DCM, the requirements of small beam size and position stability in general HP experiments. We use a water cooled diamond DCM (Oxford) which diffracts a monochromatic segment with a vertical offset of 35 mm (higher) and allows the white beam to pass through a thin diamond crystal to downstream. The diamond DCM provides a monochromatic beam in a range of 5–28 keV with ~0.7–1 eV energy resolution and a flux of $\sim 10^{13}$ photons/s at 10 keV. The full monochromatic beam is focused by a pair of long Kirkpatrick–Baez (KB) mirrors of 1 and 1.2 m in the vertical and horizontal directions, respectively. The KB mirrors are

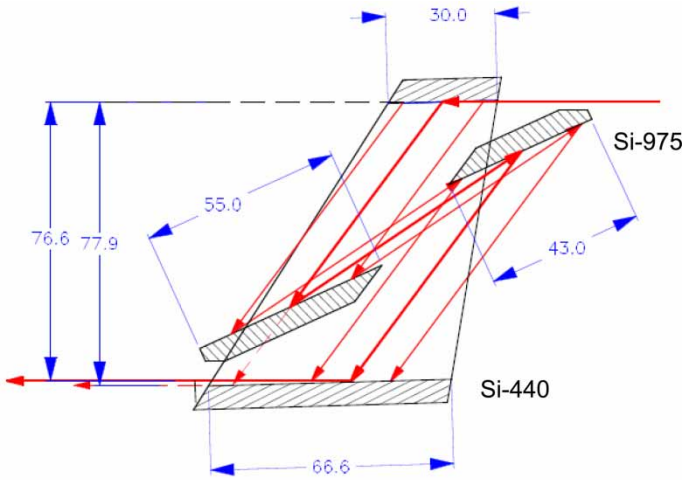

Figure 2. Schematics of the HRM installed at 16ID-C. The HRM gives monochromatic beam with 2 meV energy resolution at 14.413 keV. The entire setup of the HRM is mounted on a high precision stage, allowing for a quick in-line operation.

Downloaded By: [University of Chicago] At: 18:52 8 October 2008

located 4.5–5.5 m away from the sample position, giving a focal spot size of 25(v) × 55(h) μm^2 at full width at half maximum (FWHM). For obtaining smaller beam size, a pair of table top KB mirrors of 200 mm long are available for a spot size of about 10–15 μm. In our current operation, these two mirror systems are used separately, while the compound focusing with these two KB systems is under commissioning. The ∼1 eV energy resolution beam from diamond (1 1 1) crystals is mainly used in X-ray techniques such as XAS, X-ray emission spectroscopy (XES), and inelastic X-ray scattering (IXS).

For HP phonon and synchrotron Mössbauer studies, a high-resolution monochromator (HRM) is installed in 16ID-C (Figure 2). A combination of Si (4 4 0) and Si (9 7 5) crystals gives a resolution of ∼2 meV at 14.413 keV with a flux of 2×10^9 photons/s at the sample position in 16ID-D. The HRM operates in conjunction with the DCM, so heat load is negligible. The entire setup of the HRM is mounted on a high precision stage, allowing for a quick switch for in-line operation.

Undulator diffraction beamline. While the DCM diffracts a monochromatic segment, the transmitted white X-ray beam (at a higher energy) through a thin diamond crystal feeds into a branching monochromator (BDCM) which diffracts the beam horizontally and is offset at a distance of 1 m from the main line (Figure 1). With water cooled Si (2 2 0) crystals, the BDCM provides a monochromatic beam to 16ID-B station with a range of 25–36 keV, which serves the purpose well for most HP XRD studies. To obtain a very intense and highly focused beam at sample position, a table top KB mirror system is used in 16ID-B, giving a focused spot size of 4(v) × 5(h) μm^2 at FWHM with a flux at the focused spot of 0.5–1 × 10^{11} photons/s at 30 keV.

Running two beamlines simultaneously with one undulator. In order to run two beamlines simultaneously, the most favorable parameters of the inserting device are generally set for the spectroscopy beamline 16ID-D, where the energy and flux are optimized. Then the diffraction beamline (16ID-B) uses radiation of higher order harmonics from the defined undulator. This parasitic operation allows for two simultaneously running beamlines, but sets a limited energy range of 25–36 keV for diffraction experiments and a limited energy scan range (∼150 eV) for

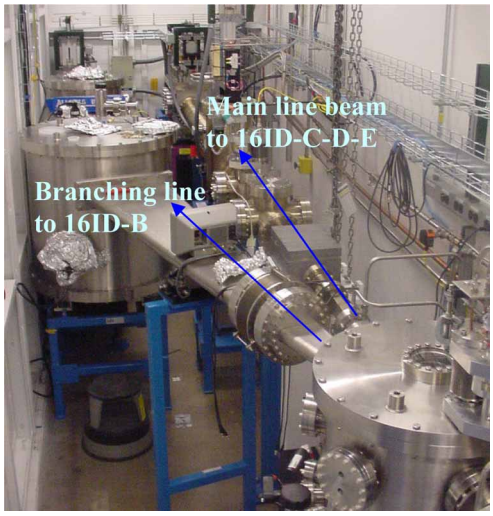

Figure 3. A picture of X-ray optics in 16ID-A. The undulator beam (16ID) is split in energy. A diamond DCM is used to diffract vertically a monochromatic segment of the X-rays into the main beamline to 16ID-C-D-E stations for HP scattering and spectroscopy studies. A branching double crystal monochromator is employed to diffract horizontally the transmitted X-ray beam (at a higher energy) to the 16ID-B station for HP XRD studies, thus creating two simultaneously operating ID lines.

Downloaded By: [University of Chicago] At: 18:52 8 October 2008

spectroscopy experiments without requiring a change of undulator gaps (Figure 3). In some occasional cases, one beamline operation could be scheduled for optimal undulator parameters.

2.3. *Bending magnet beamlines*

The bending magnet is split into two independent beamlines: 16BM-B, and 16BM-C-D. 16BM-B receives 0.5 mrad of horizontal fan, and is established as a white beam station for various white beam X-ray techniques, including EDXD and Laue X-ray absorption spectroscopy (LXAS).

16BM-C-D receives 1.0 mrad of horizontal fan. The optics enclosure 16BM-C is equipped with a Si (1 1 1) artificial channel-cut monochromator (ACCM) followed by a 1.2 m long vertical focusing KB mirror. Two silicon crystals in the ACCM are aligned to a level almost comparable to a channel-cut with dedicated picomotor and piezo controls on the second crystal (Figure 4). The narrow gap (2.5 mm) between two crystals makes the exit beam height motion within 0.15 mm in the entire energy range of 6–70 keV. By installing a fixed vertical exit slit, the ACCM provides a monochromatic beam at a constant position even when energy is changed or scanned. This energy tuning capability, together with the wide energy range and fixed exit position, makes the ACCM highly efficient and enables several novel HP X-ray measurements, such as scanning energy single crystal diffraction, anomalous XRD, and XAS. The center of the long KB mirror is 3.5 m away from the sample position in 16BM-D, providing a focal size of 10 μm at FWHM in the vertical direction. A table top KB mirror of 200 mm long focuses the beam in the horizontal direction to a size of 5 μm FWHM. Typical flux of the 5(h) $\times$ 10(v) μm^2 beam is around 3×10^9 photons/s at 15 keV.

White beam can be also delivered into 16BM-C-D. Instead of using the long KB mirror, a table top 200 mm long KB mirror is used for focusing the white beam in the vertical direction. In the horizontal direction, a 200 mm long mirror is used for focusing both the white beam and the monochromatic beam. The white beam path after a pair of table top mirrors follows exactly the monochromatic beam path which is vertically focused by the 1.2 m long KB mirror in 16BM-C.

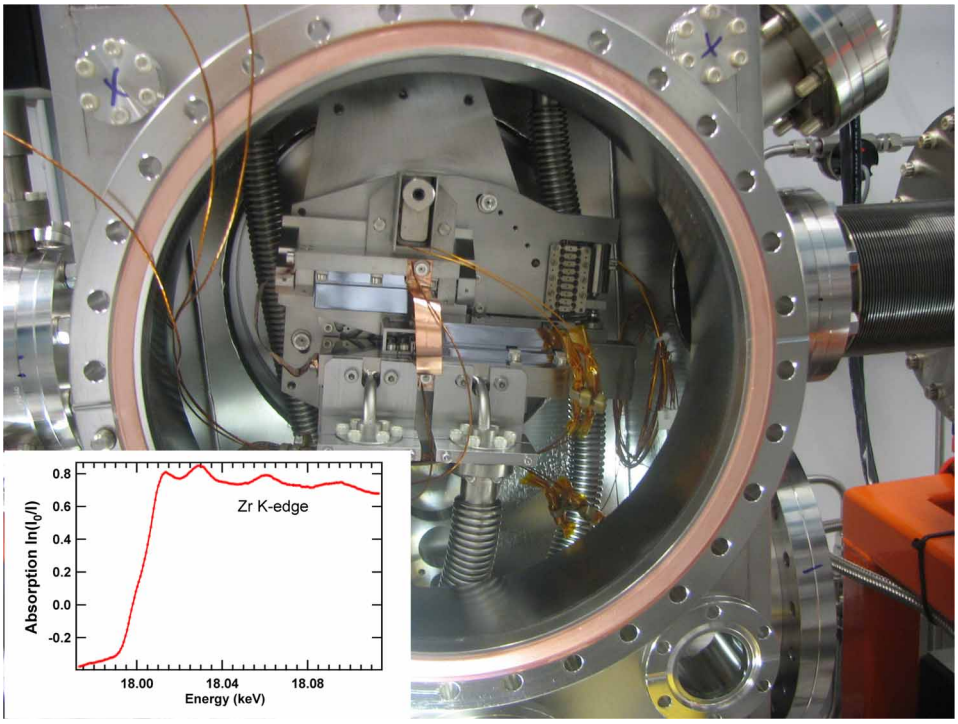

Figure 4. An inside view of the ACCM installed in 16BM-C. The narrow gap (2.5 mm) between two crystals makes the exit beam height motion within 0.15 mm in the entire energy range of 6–70 keV. A fixed vertical exit slit provides monochromatic beams at a constant position when energy is changed or scanned. The performance of the monochromator has been tested by a series of absorption measurements with various elements in wide energy ranges. The insert is an absorption spectrum of Zr K-edge.

Downloaded By: [University of Chicago] At: 18:52 8 October 2008

The availability of the white beam and tunable monochromatic beam has important applications in enabling HP single crystal diffraction, discussed below.

2.4. *General beamline features for HP studies*

Table 1 summarizes some characteristics of four simultaneously operational beamlines at HPCAT. Significant effort has been put to optimize beam size and flux at the sample position because of very small sample dimensions in HP experiments. Collimation optics, such as clean-up apertures close to sample position, are installed in all experimental setups and found to be essential for removing unwanted scattering from surrounding materials including anvils and the gasket. A set of clean-up apertures made of platinum foils is available with different aperture sizes (20–100 μm in diameter) and thickness (100–400 μm). A holder with position and tilt adjustment allows for a precise alignment and a quick switch of different clean-up apertures, for specific experimental geometries. Except the clean-up aperture, which is positioned as close to sample as possible, all other upstream X-ray optics are enclosed in shielding material, ensuring low X-ray scattering background in experimental stations.

The mounting base for a diamond anvil cell (DAC) holder is compatible among all stations, including all off-line systems, which provides a friendly operation for an integrated approach with various techniques in different experimental stations. The sample position is 89 mm above a kinematic base plate (BKL-4, Newport). The stage assembly for sample positioning is designed to have excellent stability and good resolution of motion. The sample stage has at least motorized

Table 1. Characteristics of four HPCAT experimental stations.

	16ID-B	16ID-D	16BM-B	16BM-D
Available techniques	Micro-ADXD, single crystal diffraction	XES/RXES, IXS/ X-ray, Raman, NRIXS, NFS	Micro-EDXD, single crystal diffraction, Laue XAS	Micro-ADXD, micro-EDXD, single crystal diffraction, XAS, XAD
Beam size (FWHM in μm)	4(v) × 5(h)	25(v) × 50 (h) 15(v) × 15 (h)	5(v) × 5(h)	10(v) × 5(h)
Energy range (keV)	25–35	5–28	Polychromatic beam	6-70 Polychromatic
Flux at sample position (photons s^{-1})	$0.5 - 1 \times 10^{11}$	3×10^{12} and 2×10^{9} (2meV resolution)	—	3×10^{9}
Detectors	MAR-345 IP and MAR-CCD	APD and Amtek	Ge SSD, MAR-345-IP, and MAR-CCD	Ge-SSD, MAR-345-IP, and MAR-CCD
Other major equipment	On-line laser heating, cryostat, on-line ruby/Raman system (on request)	Analyzers, cryostat, on-line ruby/Raman system (on request)	Cryostat, on-line ruby/Raman system (on request)	Cryostat, on-line ruby/Raman system (on request)

Downloaded By: [University of Chicago] At: 18:52 8 October 2008

x-y-z translations and a rotation with its axis vertical and perpendicular to the X-ray beam. The linear translations have a position resolution capable of 0.1 μm, and the rotation has an angular resolution of 0.001°. Some sample holders are water cooled for position stability, which is important for experiments involving variable temperatures.

In HP experiments, changing and measuring pressures are necessary, but often at the cost of precious beamtime. Membrane controls or motor driven pressure control systems are now widely used, which greatly increases the efficiency of beamtime use. Furthermore, these controls make it possible to have fine pressure steps, and enable special pressure-temperature paths (*e.g.*, isothermal or isobaric) in DAC. HPCAT beamlines are equipped with membrane control systems for pressure controls and on-line ruby systems for pressure measurements.

3. Experimental stations

3.1. *Undulator beamline 16ID-B (micro-ADXD, laser heating, cryostat)*

This station is primarily designed for micro-ADXD experiments. Recently, the station has been re-configured to have two separate experimental setups (Figure 5). Each setup is on a lift table that has precise and reproducible positioning of the entire apparatus. The so-called general purpose table at the upstream side has a wide-open space for general purpose micro-ADXD experiments. The sample stages have a load capacity of 150 kg, thus allowing for bulky devices, such as cryostat and externally heated equipments. The wide-open space also allows for special setups such as single crystal diffraction and high-resolution diffraction experiments. The downstream table is dedicated for *in situ* double-sided laser heated DAC experiments. A dedicated table for laser heating improves the stability and ensures an optimal optics alignment and its integration with X-ray optics.

Both tables are equipped with a pair of 200 mm long KB mirrors [11]. The distances between the sample position and centers of the horizontal and vertical KB mirrors are 350 and 550 mm,

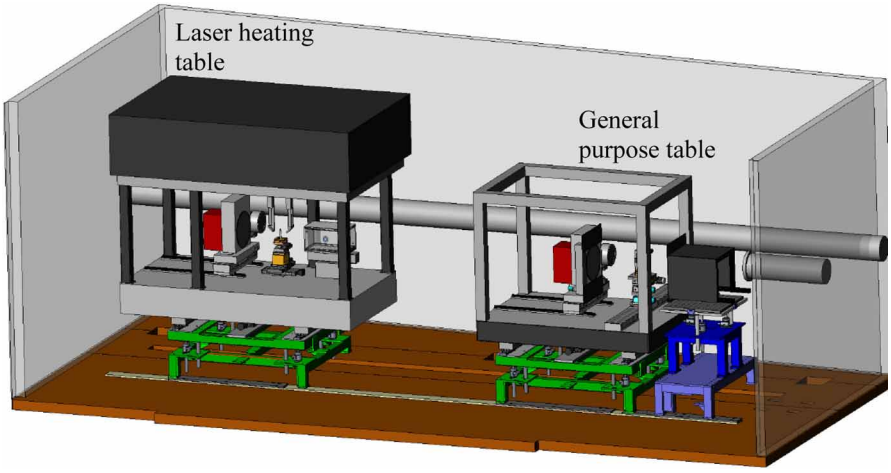

Figure 5. Two table configuration in 16ID-B. The upstream general purpose table has a wide-open space for general purpose micro-ADXD experiments. The wide-open space also allows for special setups such as single crystal diffraction and high-resolution diffraction experiments. A dedicated table downstream for laser heating improves the stability and ensures an optimal optics alignment.

Downloaded By: [University of Chicago] At: 18:52 8 October 2008

respectively. The relatively long working distances provide a well-collimated beam with divergence generally <1 mrad. In high-resolution experiments, the incident beam can be further reduced for smaller beam divergence. Between the KB mirror system and the sample position, the focused X-ray beam is collimated by a clean-up aperture of range between 20 and 50 μm in diameter. The focused beam size is about $4(v) \times 5(h)\,\mu m^2$ at sample position (Figure 6).

Both imaging plate (MAR345) and CCD (MAR-CCD) detectors are available and mounted on a motorized stage, making it exchangeable during the experiment. Diffraction collecting time in this station is short owing to the high intensity X-ray beam, typically a few seconds to minutes depending on the scattering power of samples. The sample is usually fixed at the rotation center of the sample stage. The geometry parameters of the XRD setup are calibrated using powder

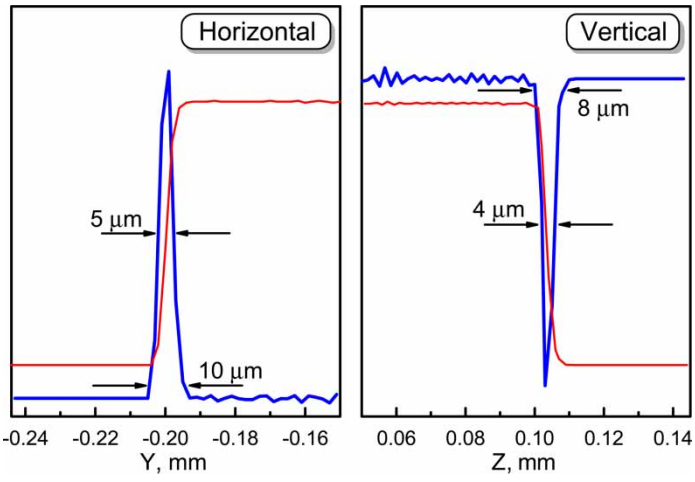

Figure 6. A typical beam size of $4 \times 5\,\mu m^2$ at FWHM at 16ID-B measured by sharp edge scans. The beam profiles are close to Gaussian, with sizes at full width 5% maximum of 8 μm and 10 μm in vertical and horizontal directions, respectively.

diffraction from standard materials such as CeO_2 and silicon from NIST. Two X-ray detectors are shared by two tables where identical base holders are installed.

The basic features of the laser heating system have been described elsewhere [12]. Briefly, the system is for *in situ* XRD in a laser heated DAC. The heating spot size is about 20–30 μm in diameter, compared with the X-ray beam size of diameter 5 μm. Temperatures can be measured simultaneously from both sides using an on-line spectrometer. A sensitive CCD camera often allows real-time imaging of X-ray-induced luminescence from the sample and/or medium, an important capability for precise alignment (the X-ray beam, the heating spot and the area where the thermal radiation is collected for temperature measurement). The laser power is controlled by introducing a set of polarizing beamsplitters combined with wave plates. All controls can be made remotely outside the experimental station with a user-friendly interface window.

3.2. *Undulator beamline 16ID-D (IXS, XES, nuclear resonant inelastic X-ray scattering (NRIXS), NFS, cryostat)*

Station 16ID-D is primarily designed for XRS measurement at HPs. Major upstream optics for this station include a high heat load diamond crystal DCM with ∼eV energy resolution, an interchangeable HRM at ∼meV level energy resolution, and a pair of meter long KB mirrors for beam focusing. The upstream optics provide a high flux monochromatic beam in an energy range of 5–28 keV for a large number of mutually compatible and complimentary HP XRS techniques, including:

- HP (resonant) XES
- HP XAS
- HP IXS
- HP NRIXS
- HP NFS or synchrotron Mössbauer spectroscopy.

These techniques cover a wide range of energy resolution, momentum transfer (q), and temporal resolution, but share a common need for maximum photon intensity, minimum beam size, and background discrimination for successful HP studies. These flux-limited techniques have only become practical with the arrival of third-generation high-energy synchrotron sources. Since higher pressures are reached at the expense of diminishing sample volume, the pressure limit of these experiments depends upon the ability to condense the maximum number of photons onto a microscopic sample volume, and to discriminate effectively the background signals from the surrounding chamber materials.

Typical beam size at the sample position is 25(v) × 50(h) μm^2 at FWHM when using the meter long KB mirrors. Smaller beam size (10–15 μm) can be achieved by using a pair of 200 mm long KB mirrors, with a reduction of flux by a factor of 5 compared with that which uses meter long KB mirrors. Efforts are being made to install a pair of table top KB mirrors of 400–500 mm long, which will optimize both beam size and flux at sample position.

The versatile spectrometer at 16ID-D (Figure 7), including a sample stage, a 2.7 m horizontal arm, a 90°–2θ semicircular base, a synchronized θ–2θ Rowland circle, and multiple analyzers and detectors, is optimized for each individual HP spectroscopy technique. The sample stack includes tilting, fine vertical positioning over a large range, and accommodates precision mounting for a variety of sample configurations, including furnaces, cryostats, DACs and a nuclear forward/inelastic scattering setup. Apertures are used to clean up the tails of the main beam incident on the sample, and scatter slits are used after the sample to reduce any parasitic scattering. The main arm has all motions to fully orient the backscattering analyzer. The main rotation stage

Downloaded By: [University of Chicago] At: 18:52 8 October 2008

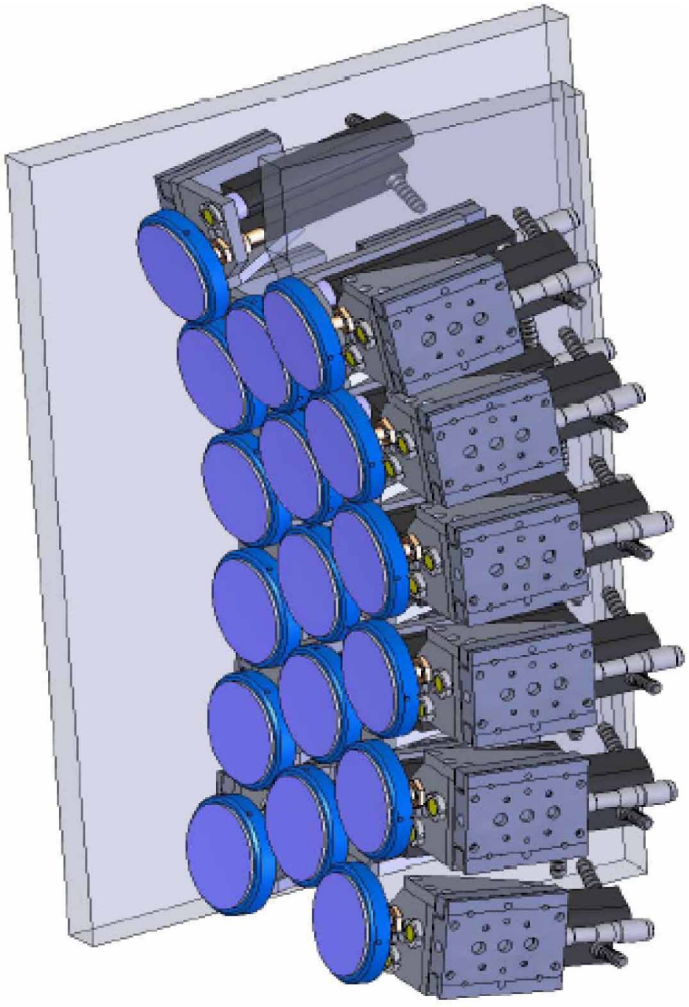

Figure 7. Design of a 17-element analyzer for IXS and X-ray Raman measurements at HP.

Downloaded By: [University of Chicago] At: 18:52 8 October 2008

employs a Newport circle which has motor resolution of $5 \times 10^{-5\circ}$/step and a circle of confusion of about 7 μm.

We have upgraded the backscattering spectrometer to incorporate an emission spectrometer with which to measure XES from 5 to 18 keV for valuable information on the filled electronic states of samples [13]. In HP XES experiments, the incident beam energy is fixed and the emission X-ray radiation can be collected at any direction. High-resolution emission spectra are obtained by a synchronized θ–2θ scan of the analyzer and the detector, on a Rowland circle of 1 m in diameter. The excitation X-ray source only needs to have higher energy than that of the fluorescent photons. In principle, white, pink, and monochromatic X-rays can all be used as the source. In practice, if sufficient intensity is available, the monochromatic source is preferred because white and pink radiations often cause higher backgrounds and may damage the diamond anvils.

When incident photon energy is tuned, one can obtain selected information directly related to a specific intermediate state by using resonant XES method [14]. In HP RXES experiments, we need to scan both incident and scattered X-ray energies. This is similar to a combination of XAS and XES experiments and is compatible with the 16ID-D configuration.

In HP IXS experiments for studying full dynamic response function of charge systems (electrons, plasma), spherically bent single-crystal analyzers Si (6 6 0) collect scattered radiation, and focus it on a detector (Amptek) in a nearly backscattering geometry, maximizing energy resolution. By fixing the energy at the elastic line, the incident X-ray energy is scanned relative to the elastic line to determine the inelastic (Raman) shift. Many HP IXS experiments can use ~1 eV resolution direct beam from the DCM. A 1 m analyzer-to-detector distance would usually suffice. For some narrower IXS features, the use of the HRM and longer analyzer-to-detector distances up to the full arm 2.7 m would be necessary. The angle 2θ between the incident beam and the scattered X-radiation defines the momentum transfer ($q = 4\pi E \sin\theta$, where E is the scattered X-ray energy). Some IXS features are relatively insensitive to q. Multiple analyzers can thus be used to increase the counting rate without concern for their difference in q. Data collection efficiency has been increased multiple-fold by using an array of six analyzers [15]. An array of 17 analyzers is currently under construction at HPCAT (Figure 8).

Important phonon dynamic and thermodynamic information, including vibrational kinetic energy, zero-point vibrational energy, vibrational entropy, vibrational heat capacity, Debye temperature, Grüneisen parameter, longitudinal velocity, shear velocities, bulk modulus, and shear modulus can be derived from knowledge of the phonon density of states (DOS) which can be measured by NRIXS. In HP NRIXS experiments, an in-line HRM is used to narrow down the photon energy to meV resolution and fine-tune the monochromatic X-ray near the exceedingly narrow nuclear resonant (elastic) line. Avalanche photodiodes (APD) are used to collect only signals from nuclear resonance absorption, and reject all non-resonantly scattered radiation by using a time discrimination method [16]. The APD directly downstream of the sample collects

Downloaded By: [University of Chicago] At: 18:52 8 October 2008

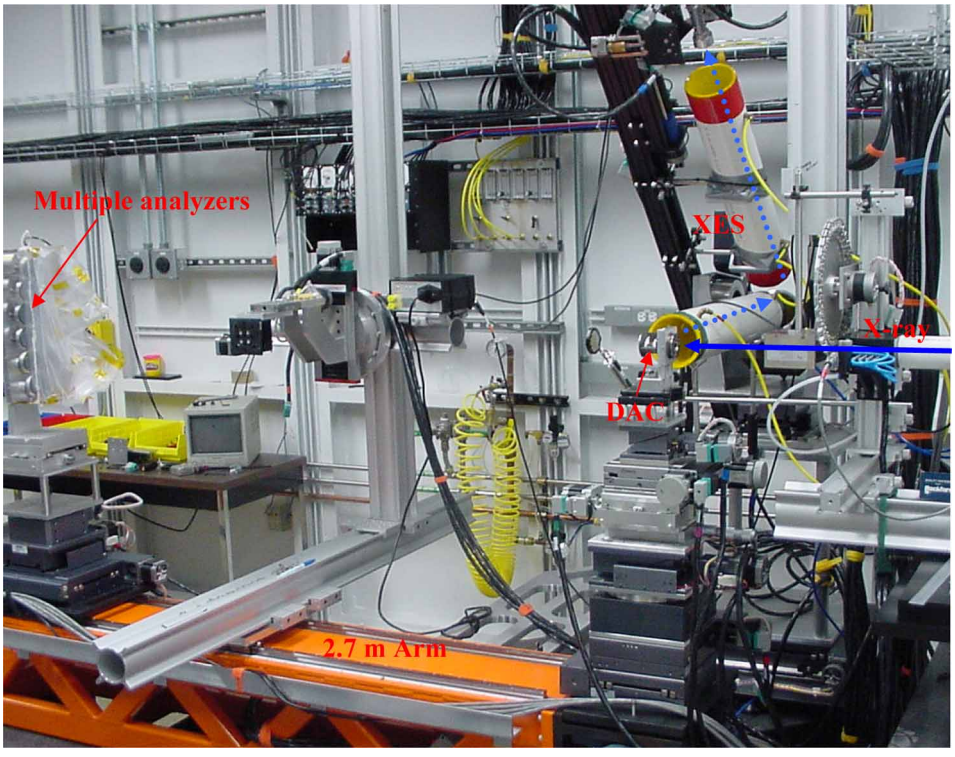

Figure 8. The spectrometer setup in 16ID-D. The figure shows a DAC under XES measurement. The multiple analyzers in the downstream side can be moved in quickly along the 2.7 m long arm for IXS (X-ray Raman) measurements.

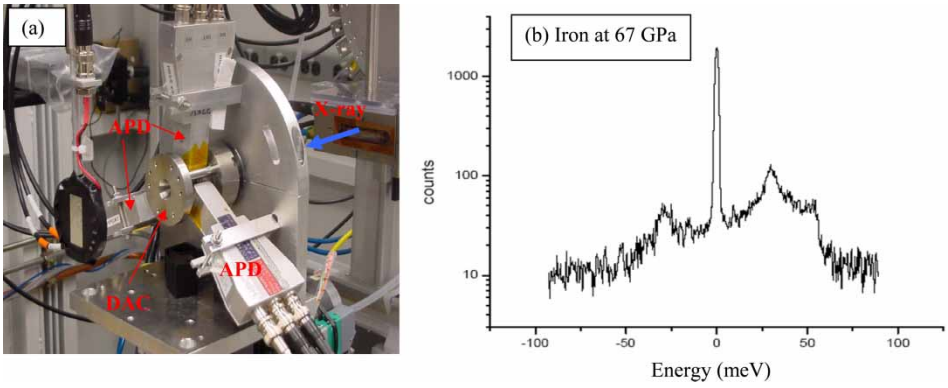

Figure 9. (a) A panoramic DAC is used for NRIXS measurements at 16ID-D. Three APD detectors are put very close to sample for maximum solid angles. Not shown in the figure is an APD detector at the downstream side which is used for NFS measurements. (b) NRIXS data for iron at 67 GPa with collecting time of 4 hours.

Downloaded By: [University of Chicago] At: 18:52 8 October 2008

NFS spectra which provide a precise determination of the hyperfine interaction parameter and Lamb-Mössbauer factor, and the APDs surrounding the sample collect NRIXS spectra which provide the phonon DOS. In order to maximize the solid angle in collecting scattering signals, APDs have to be as close to the sample as possible (Figure 9). DACs with wide side opening, such as panoramic DAC, are often required for HP NRIXS measurements.

3.3. *Bending magnet beamline 16BM-B (white beam, micro-EDXD, single crystal diffraction, scanning angle EDXD, Laue absorption spectroscopy)*

The 16BM-B station has been open to general users since October 2006. Several white beam X-ray techniques have been developed, including micro-EDXD, single crystal diffraction, and XAS with white beam.

Particular effort has been put into minimizing the white radiation background in the hutch. A double slit system is used before a 200 mm long KB mirror system. The distance between the sample position and the KB mirror system can be changed and controlled by a motor, which provides a variable beam size from 5 to 50 μm at FWHM in both horizontal and vertical directions. The small tilt angle of the KB mirror allows a large energy range of 5–100 keV. The entire KB mirror system and slit systems are housed in an enclosure of lead shielding plates.

The primary setup in 16BM-B station is EDXD, with a 2θ-circle (Huber 4 4 0) and a stage stack for x-y-z translations and a rotation (ω stage) with its axis vertical and perpendicular to the X-ray beam. These stages have a capacity of 150 kg, thus allowing for heavy duty devices to be used. The circle of confusion for 2θ and ω is less than 5 μm.

In HP micro-EDXD experiments, collimated white radiation enters a pressure device and sample with diffracted radiation in all energies recorded by an energy dispersive detector at a fixed angle. To reduce the background and unwanted signals from surrounding anvils, it is critical to have an optimized collimation of the diffracted radiation. A pencil-type tip is installed, which can be moved along 2θ arm and put very close to the sample position. The tip size is motor-controlled, allowing for an optimized combination of size and position of the tip in EDXD experiments. A solid state Ge detector (Canberra) is used to record energy dispersive information in one dimensional energy space.

The small circle of confusion allows us to conduct scanning angle EDXD experiments with DAC [Yang et al., submitted to this volume]. At each 2θ angle step, EDXD data can be collected in a large angle range, providing a 2D image in energy and angle space. Projected patterns to

energy are regular EDXD data at a certain 2θ angle. When projected to 2θ angle, the scanning angle EDXD image provides angle dispersive data, which have been used for Rietveld refinement [17]. The main feature of the technique is the spatial depth resolution along the beam pass, which improves the signal to noise ratio significantly compared with routine monochromatic ADXD. This is particularly useful and essential for low-scattering materials, amorphous and liquid diffraction/scattering studies using DAC. Data collected from crystalline and amorphous samples in DACs show that only a coarse 2θ scan (0.1–0.2° for crystals and 0.5° for amorphous structure) is needed to obtain a similar angular resolution of monochromatic angle-dispersive diffraction by taking the benefit of full diffraction spectrum from white beam diffraction. Furthermore, the scanning angle EDXD image provides data at all energies, which could be used for retrieving element specific structural information.

An important area under rapid development at 16BM-B is HP single-crystal X-ray diffraction (SCD). These experiments are unique and important sources to obtain detailed structural information that are often not available from polycrystalline samples. Using a smooth white BM source for HP SCD actually has an advantage over the more brilliant structured undulator source. The brilliance of the BM beam is sufficient to produce a clearly defined SCD signal from micron-sized single crystals. HP SCD with EDXD has been previously developed and used in HP research for years, but mainly limited to the determination of the orientation matrix and unit cell parameters [18,19]. The development at HPCAT extends the determinations of intensity which is crucial for structure refinement. White Laue diffraction spots on a CCD detector define symmetry, number of crystals, and their orientations. The SCD with EDXD determines cell parameters. Intensity information is obtained from diffraction signals at a given energy by orienting crystals and rotating 2θ angles according to determined orientation matrix. The SCD development is still under progress.

Recently, a new XAS method has been developed at 16BM-B using Laue diffraction of a flat analyzer crystal from white synchrotron radiation. This LXAS uses a well-collimated white beam at a fixed position in a sample. The transmitted beam intensity after sample provides the element specific absorption information, and is collected, through the silicon single crystal analyzer, by its diffracted signals on a CCD detector (MAR-CCD) with 2θ angles greater than 150 degrees. The silicon crystal is mounted on a rotary stage with an angular resolution of $<0.001°$. High-resolution single crystal diffraction spots from the silicon crystal are recorded at each rotation angle step of 0.005°. As the rotation angle is scanned, energy spectrum of the transmitted beam is measured, providing X-ray absorption information from various elements in the sample. Considering the small pixel size, the spread function of the CCD pixels, and small Darwin widths of high order reflections of the silicon crystal, an energy resolution of 100 meV could be achieved. Different diffraction spots cover different energy ranges. Thus, this method can simultaneously obtain absorption information for multiple elements. Compared with traditional XAS with scanning energies, this technique has a few advantages, including a fixed beam position on sample, higher energy resolution, and information of multiple elements in a single measurement.

3.4. *Bending magnet beamline 16BM-D (micro-ADXD, anomalous diffraction/scattering, high resolution diffraction, micro-XAS, radial diffraction)*

This station is primarily for micro-ADXD and micro-XAS experiments at extreme pressure-temperature conditions. Although both white beam and monochromatic beams are available, white beam may be used only on special request. The X-ray beam at the sample position can be either focused or unfocused. For focused beam in the vertical direction, a large KB mirror (1.2 m long) in 16BM-C is used, which is about 3.5 m away from the sample position and produces a focus of about 10 μm at FWHM. A table-top KB mirror (200 mm long) is located 400 mm from the sample position, and is used for horizontal focusing, resulting in a 5(h) $\times$ 10(v) μm^2 focus

Downloaded By: [University of Chicago] At: 18:52 8 October 2008

spot at FWHM at the sample position. The unfocused beam is mainly for radiographic images, high-resolution diffraction, and experiments with large samples.

Sample stages include a 2θ-circle (Huber 4 8 0) and a stage stack for x-y-z translations and a rotation (ω stage) with its axis vertical and perpendicular to the X-ray beam. These stages have a capacity of 150 kg, allowing for heavy devices such as cryostat. The circle of confusion of 2θ and ω is less than 5 μm. An imaging plate (IP, MAR345) is the primary detector, chosen for its large size and high dynamic range. Collecting time is typically minutes to a few tens of minutes with a readout time of about 2 min. Compared with CCD detectors, the IP has the advantage of low dark background accumulation in relatively long exposure times. A CCD detector is also available for some experiments (chemical reactions, kinetics studies) where fast readout is critical.

Monochromatic beams of 6–70 keV are delivered by an ACCM in 16BM-C. One very useful feature of the monochromator is the fixed exit beam position as we change or scan energies. For maximizing flux at the sample position, we have two typical operation modes: one for energy ranges of 6–35 keV and the other for the entire energy range. In the low energy mode, the tilt angles of KB mirrors can be adjusted for receiving a beam of 2 mm in vertical and 0.4 mm in horizontal directions. In the other mode, the KB mirrors receive 1 and 0.2 mm in vertical and horizontal directions, respectively. In order to keep a fixed beam position even for the white beam, a new table top KB mirror system is under design. With the new KB system, the white beam will be focused by a 200 mm long mirror in vertical direction, while the vertically offset monochromatic beam is focused by the meter long large mirror following the same path as the white beam and will reach the same focal point. The capability of switching between white and monochromatic beams has important applications in HP SCD experiments.

In HP SCD at 16BM-D, Laue diffraction spots using a white beam are recorded by a CCD or an IP detector. The tunable monochromator can be moved in-line to deliver a monochromatic beam exactly following the focused white-beam path. The white beam Laue pattern defines the symmetry, number of crystals, and their orientations. Using and tuning the monochromator energy reveals the d-spacing of the specific reflection, defines the unit-cell parameters of the microscopic crystal, and monitors the intensity change of the Laue spot on area detector [20].

With the ability of tuning over a wide energy range of monochromatic X-radiation, micro XAS is being developed at 16BM-D. The near-edge X-ray absorption fine structure provides information on the symmetry-projected conduction band DOS, whereas the extended X-ray absorption fine structure (EXAFS) provides the local structure information. These are powerful element-specific probes that reveal the electronic and structural changes taking place at HP [21]. XAS was one of the first XRS technique applied to HP synchrotron research [22]. Laue diffraction of single-crystal diamonds causes sharp absorption peaks that are detrimental to EXAFS spectroscopy. To greatly reduce the amount of diamond in the beam path, perforated diamond anvils are often used [23]. Alternative beam paths through high-strength beryllium and boron gaskets are used in the new panoramic DAC at higher pressures. Both techniques extend XAS down to 5 keV which covers the K-edges of first-row transition elements and the L-edges of rare earth elements. Specific electronic, magnetic, and optical properties of these elements are crucial for a wide range of applications in materials sciences and technology.

The tunable monochromator also allows for conducting X-ray anomalous diffraction (XAD) experiments at 16BM-D. X-ray energy can be scanned across an absorption edge of an atom (far below, far above and in the middle of the absorption edge), which changes the scattering in a defined way. XAD provides element specific structural data, including atomic scattering factors and order–disorder information from site occupancies. Such information is often essential in separating structure and composition [24]. Furthermore, for amorphous materials and liquids, XAD provides detailed local structural information such as partial structural factors.

HP micro-ADXD is still the most widely used technique at 16BM-D. The overall setup of ADXD is similar to that at 16IB-D, except the beam flux at the sample position which is about a factor

Downloaded By: [University of Chicago] At: 18:52 8 October 2008

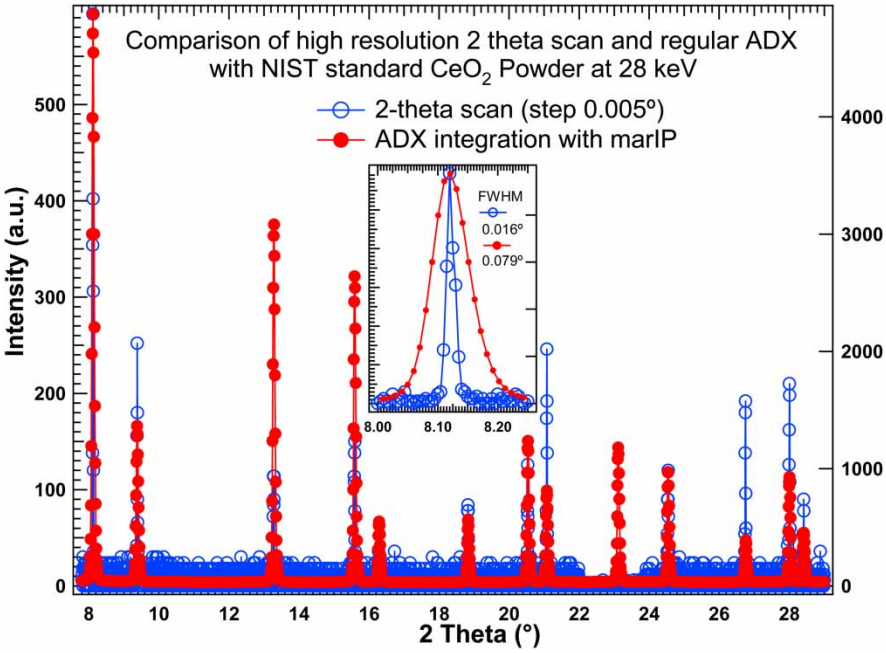

Figure 10. A comparison of diffraction resolution between regular ADXD IP data and those from 2θ scan. A factor of 5–8 increase is shown from a standard sample CeO_2 powder at 28 keV. The ADXD data were taken with a MAR-IP-3450 at a distance of 340 mm from the sample position. Exposure time was 60 seconds. Incident beam divergence was around 7×10^{-4}. In the scanning angle high resolution diffraction, incident beam convergence was reduced to 1×10^{-4}. The slit in front of the detector (Ge SSD) had a size of 150 μm and was located 550 mm away from the sample, providing an angular resolution of 2.7×10^{-4}.

of 200 less than that in 16ID-B. Thus this station is suited for relatively high Z materials. Typical exposure time ranges from 1 to 30 min for powder samples. In ADXD experiments, diffraction resolution is often defined by beam divergence, detector's pixel size, and spread function of detectors. Typical $\Delta d/d$ is about 2×10^{-3} with a MAR-IP at 16BM-D. In order to increase diffraction resolution, beam divergence needs to be reduced, which can be realized by decreasing the incident beam size before entering the KB mirrors. A point detector with a narrow slit in front can be mounted on the 2θ arm. The recorded intensities with scanning 2θ provide HR diffraction patterns. Typical resolution of $\Delta d/d$ is about 10^{-4}, a factor of 5–8 increase compared with those by using MAR-IP (Figure 10). Such experiments are very well suited in 16BM-D because both area detectors (CCD or IP) and solid-state detector or point detectors are available and quickly interchangeable during the experiment. However, HR diffraction experiments are time consuming, and typically take ∼8–24 hours for a full range scan at 16BM-D. One may use an area detector for 'normal' ADXD experiments. When a particular region needs high resolution, one can switch to a point detector (or SSD) for high-resolution angle scan.

4. Supporting facility

For efficient use of beam time, HP samples should be always prepared before the assigned beam time. However, samples and/or DACs may be subject to unpredicted changes or even failures as experimental conditions vary. It is essential to have facilities for sample preparation on site. At HPCAT, we have established support facilities for sample preparation and characterization, including: (i) microscopes; (ii) a mechanical micro-drill machine and electric discharge machines;

Downloaded By: [University of Chicago] At: 18:52 8 October 2008

(iii) a cryogenic loading facility; and (iv) tools for routine DAC operation. A micro-Raman system is available for pressure measurement and sample characterization. The laser heating systems installed in the experimental stations can also be used as off-line facilities if hutches are accessible. Besides these dedicated DAC facilities, there are machine shop facilities for trained users. HPCAT also provides computer software (commercial and developed by staff) for users to carry out data analysis on site. The supporting facility plays an important role in productive experiments. It also makes it possible to carry out collaborative work between HPCAT staff and scientists who do not have HP facilities at their home institutions or users from other beamlines at APS.

5. Future developments at HPCAT

X-ray source. HP X-ray studies are often brilliance-limited. Higher brilliance enables new, more powerful experiments, or leads to higher efficiency for existing techniques. The current insertion device at HPCAT is a standard APS type-A, 2.5 m undulator. The 5 m long straight section has room for two undulators. We plan to add a second undulator in canted mode. The double-undulator system will allow independent control of undulator parameters for concurrently operating in two ID beamlines, thus providing optimal operations in each beamline and increasing the usable ID beam time. In the long term, APS is planning a new storage ring lattice and whole facility upgrade. Having the second undulator together with the new APS innovative developments in the accelerator lattice and insertion devices, we anticipate an increase in X-ray radiation brilliance by more than an order of magnitude at HPCAT.

Optics. High-heat load optics and monochromators will be upgraded and optimized, emphasizing high flux, negligible beam distortion, and high stability in both position and energy. The upgrade will enhance our capabilities for tighter focus, maintaining precise positional and energy stability and, together with the enhanced undulator operation, greatly increase the efficiency in 'photon hungry' HP experiments.

Beam size. One direction in HPCAT development is to reduce the probing beam size, from the current 5 to 0.5 μm. We plan to utilize the high brilliant undulator source, X-ray optics with minimum distortion, ultra-stable support table, state of the art KB focus mirror system, and high resolution sample stages, for providing half-micron diameter beam size, an order of magnitude smaller at the end station 16ID-E 75 m from the source. This will allow us to probe submicron sample sizes for ultra-HP studies; to investigate grain-to-grain interaction with submicron resolution in all three dimensions; to map out the grain boundary, phase boundary, chemical ordering, local stress/strain, structure evolution within the individual grain; and to study nanoscale single crystals. It will also benefit the study of natural mineral inclusions which are usually submicron in size and embedded in other mineral substrate.

Time resolved. Synchrotron radiation is a pulsed source with a well-defined time structure, suitable for time-resolved studies. However, this area is still in its infancy in HP research. A handful of pilot experiments at HPCAT have shown its crucial role in understanding physical and chemical processes at HP. For example, diffraction patterns from single crystal samples under dynamic shock loading have been recorded in real time by performing sub-nanosecond, high-resolution diffraction measurements. Using a dynamic DAC (dDAC) [25], capable of fine control of pressures and (de)compression with a repetition rate of 1 Hz–1 kHz, phase transition dynamics have been studied at HP. The dDAC technique repetitively applies a time-dependent load/pressure profile to a sample. This capability allows studies of the kinetics of phase transitions

Downloaded By: [University of Chicago] At: 18:52 8 October 2008

and metastable phases at compression (strain) rates of up to 500 GPa/s [26]. On the other hand, the pulsed laser heat of the DAC repetitively heats up a sample at a few kHz rate at a given pressure. The laser heated DAC in general has been used for generating extreme pressure-temperature conditions. However, with the traditional continuous-wave laser heating techniques, laser heating at Mbar pressures causes frequent anvil failures. With pulsed laser heating, we expect the shorter time to reduce the exposure of the DAC to extreme conditions and the associated failure modes. For time resolved studies in repetitive events, an X-ray shutter (a repetition rate of a few kHz) and a HP device (dDAC or pulsed laser heating) can be synchronized to each point relative to an event. In this case, detectors do not necessarily need the time resolved capability, and existing detectors (*e.g.*, MAR-IP) can be used. For time resolved studies in fast single processing events (shockwave, run-away processes), fast detectors are needed. Time resolved HP studies will provide important information on structural dynamics, phase transition dynamics, chemical reactions under HP, and materials metastability and local minimum energy configurations.

High-energy resolution. The IXS technique developed at HPCAT has an energy resolution of 0.7–1 eV for investigating fundamental properties of the electron gas, strongly correlated electron systems, and high-energy electronic excitations in energy and momentum space. For investigating materials' phonon density of state and the Mössbauer effect, an ultra HRM with 1–2 meV resolution is operational for NRIXS and NFS, respectively. Although there is a great need for improving the energy resolution in IXS for more detail information on electronic excitations and plasmons, and finer features in X-ray Raman, count-rates become a challenging issue because higher resolution means a smaller slice of both the incident spectrum and the scattered photons, in addition to the small inelastic scattering cross-section. With the source and optics upgrade, the increase in brilliance and efficiency allows the opportunity to develop high resolution IXS in 100 meV region. We plan to construct a set of HRM with 70–200 meV resolution and an analyzer array matching to (and slightly higher than) the energy resolution of the HRM. Flat-pixel analyzers, together with newly developed Pilatus area detector, will be used for high-energy resolution, low background, and high efficient IXS measurements.

Downloaded By: [University of Chicago] At: 18:52 8 October 2008

Acknowledgement

We thank Daniel Häusermann, Maddurry Somayazulu, Michael Hu, Haozhe Liu, Yang Ding, Daijo Ikuta, and Veronica O'Connor for their important contributions to the HPCAT program. We thank Chi-Chang Kao, Mark Rivers, Steve Sutton, Vitali Prakapenka, Peter Eng, Ercan Alp, Wolfgang Sturhahn, Jiyong Zhao, Thomas Toellner, and De-Ming Shu for their help. Rus Hemley, Malcolm Nicol, Choong-shik Yoo, Will Evans, Steve Gramsch, Murli Manghnani are thanked for their support. HPCAT is supported by DOE-BES, DOE-NNSA, NSF, DOD-TAAC and the W.M. Keck Foundation. APS is supported by DOE-BES, under Contract No. DE-AC02-06CH11357.

References

[1] G. Shen, V.B. Prakapenka, P.J. Eng, M.L. Rivers, and S.R. Sutton, *Facilities for high pressure research with the diamond anvil cell at GSECARS*, J. Sync. Radiat. 12 (2005), pp. 642–649.

[2] M. Mezouar, W.A. Crichton, S. Bauchau, F. Thurel, H. Witsch, F. Torrecillas, G. Blattmann, P. Marion, Y. Dabin, J. Chavanne, O. Hignette, C. Morawe, and C. Borel, *Development of a new state-of-the-art beamline optimized for monochromatic single-crystal and powder X-ray diffraction under extreme conditions at the ESRF*, J. Sync. Radiat. 12 (2005), pp. 659–664.

[3] Y. Ohishi, N. Hirao, N. Sata, K. Hirose, and M. Takata, *Highly intense monochromatic X-ray diffraction facility for high-pressure research at SPring-8*, High Pressure Research 28(3) (2008), pp. 163–173.

[4] R.J. Hemley, H.K. Mao, and V.V. Struzhkin, *Synchrotron radiation and high pressure: new light on materials under extreme conditions*, J. Sync. Radiat. 12 (2005), pp. 135–154.

[5] H.-K. Mao and R.J. Hemley, *High-pressure geoscience special feature: the high-pressure dimension in earth and planetary science*, Proceedings of the National Academy of Sciences 104(22) (2007), pp. 9114–9115.

[6] G. Shen, V.B. Prakapenka, M.L. Rivers, and S.R. Sutton, *Structure of liquid iron at pressures up to 58 GPa*, Phys. Rev. Lett. 92 (2004), p. 185701.

[7] J. Badro, G. Fiquet, F. Guyot, J.-P. Rueff, V.V. Struzhkin, G. Vanko, and G. Monaco, *Iron partitioning in earth's mantle: toward a deep lower mantle discontinuity*, Science 300(5620) (2003), pp. 789–791.
[8] J.F. Lin, W. Sturhahn, J. Zhao, G. Shen, H.K. Mao, and R.J. Hemley, *Sound velocities of hot dense iron: Birch's law revisited*, Science 308 (2005), pp. 1892–1894.
[9] HPCATWeb: http://www.hpcat.aps.anl.gov/hpcat%20publish.htm.
[10] Z. Cai, R.J. Dejus, P. Den Hartog, Y. Feng, E. Gluskin, D. Haeffner, P. Ilinski, B. Lai, D. Legnini, E.R. Moog, S. Shastri, E. Trakhtenberg, I. Vasserman, and W. Yun, *APS undulator radiation – first results*. Review of Scientific Instruments 67 (1996), p. 3348.
[11] P. Eng, M.L. Rivers, B.X. Yang, and W. Schildkamp, *Microfocusing 4 keV to 65 keV X-rays with bent Kirkpatric–Baez mirrors*, Proc. SPIE 2516 (1995), pp. 41–51.
[12] Y. Meng, G. Shen, and H.-K. Mao, *Double-sided laser heating system at HPCAT for in situ X-ray diffraction at high pressures and high temperatures*, J. Phys. Condens. Matter. 18 (2006), pp. s1097–s1103.
[13] C.S. Yoo, B. Maddox, J.-H.P. Klepeis, V. Iota, W. Evans, A. McMahan, M.Y. Hu, P. Chow, M. Somayazulu, D. Häusermann, R.T. Scalettar, and W.E. Pickett, *First-order isostructural Mott transition in highly compressed MnO*, Phys. Rev. Lett. 94 (2005), p. 115502.
[14] Y. Ding, D. Haskel, S.G. Ovchinnikov, Y.-C. Tseng, Y.S. Orlov, J.C. Lang, and H.K. Mao, *Novel pressure-induced magnetic transition in magnetite* (Fe_3O_4), Phys. Rev. Lett. 100 (2007), p. 045508.
[15] B.R. Maddox, A. Lazicki, C.-S. Yoo, V. Iota, M. Chen, A.K. McMahan, M.Y. Hu, P. Chow, R.T. Scalettar, and W.E. Pickett, *4f delocalization in Gd: inelastic X-ray scattering at ultrahigh pressure*, Phys. Rev. Lett. 96 (2006), p. 216701.
[16] W. Sturhahn, *Nuclear resonant scattering*, J. Phys. Condens. Matter. 16 (2004), pp. S497–S530.
[17] Y. Wang, T. Uchida, R. Von Dreele, M.L. Rivers, N. Nishiyama, K. Funakoshi, A. Nozawa, and H. Kaneko, *A new technique for angle-dispersive powder diffraction using an energy-dispersive setup and synchrotron radiation*, J. Appl. Cryst. 37 (2004), pp. 947–956.
[18] P. Loubeyre, R. LeToullec, D. Hausermann, M. Hanfland, R.J. Hemley, H.K. Mao, and L.W. Finger, *X-ray diffraction and equation of state of hydrogen at megabar pressures*, Nature 383(6602) (1996), pp. 702–704.
[19] H.K. Mao, A.P. Jephcoat, R.J. Hemley, L.W. Finger, C.S. Zha, R.M. Hazen, and D.E. Cox, *Synchrotron X-ray diffraction measurements of single-crystal hydrogen to 26.5 gigapascals*, Science 239(4844) (1988), pp. 1131–1134.
[20] N. Tamura, A.A. MacDowell, R. Spolenak, B.C. Valek, J.C. Bravman, W.L. Brown, R.S. Celestre, H.A. Padmore, B.W. Batterman, and J.R. Patel, *Scanning X-ray microdiffraction with submicrometer white beam for strain/stress and orientation mapping in thin films*, J. Synchrotron Radiat. 10(2) (2003), pp. 137–143.
[21] J.P. Itie, F. Baudelet, E. Dartyge, A. Fontaine, H. Tolentino, and A. San-Miguel, *X-ray absorption spectroscopy and high pressure*, High Press. Res. 8 (1992), pp. 697–702.
[22] R. Ingalls, G.A. Garcia, and E.A. Stern, *X-ray absorption at high pressure*, Phys. Rev. Lett. 40(5) (1978), p. 334.
[23] R.A. Mayanovic, A.J. Anderson, W.A. Bassett, and I.M. Chou, *Synchrotron X-ray spectroscopy of Eu/HNO3 aqueous solutions at high temperatures and pressures and Nb-bearing silicate melt phases coexisting with hydrothermal fluids using a modified hydrothermal diamond anvil cell and rail assembly*, Rev. Sci. Instrum. 78(5) (2007), p. 53904.
[24] T.U. Schulli, M. Sztucki, V. Chamard, T.H. Metzger, and D. Schuh, *Anomalous X-ray diffraction on InAs/GaAs quantum dot systems*, Appl. Phys. Lett. 81(3) (2002), pp. 448–450.
[25] W.J. Evans, C.-S. Yoo, G.W. Lee, H. Cynn, M.J. Lipp, and K. Visbeck, *Dynamic diamond anvil cell (dDAC): A novel device for studying the dynamic-pressure properties of materials*, Rev. Sci. Instrum. 78 (2007), p. 073904.
[26] C.S. Yoo, V. Iota, J. Park, G. Lee, W. Evans, Z. Jenei, and H. Cynn, *High pressure materials research using advanced third-generation synchrotron X-ray*, in *Synchrotron Radiation Materials Science*, G. Long, ed., Vol. 5, 2006, pp. 285–286.

Downloaded By: [University of Chicago] At: 18:52 8 October 2008