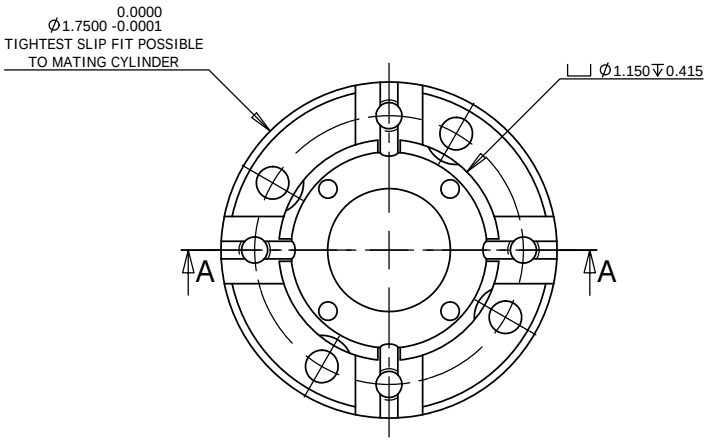

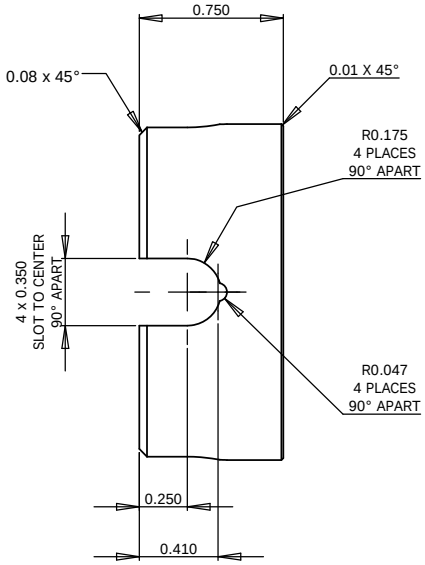

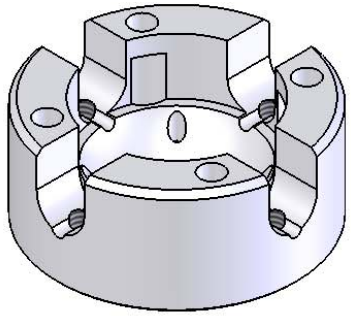

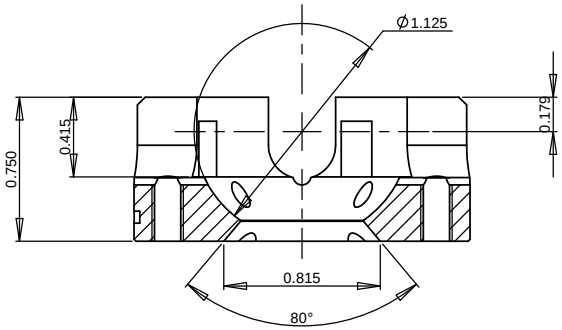

SECTION A-A

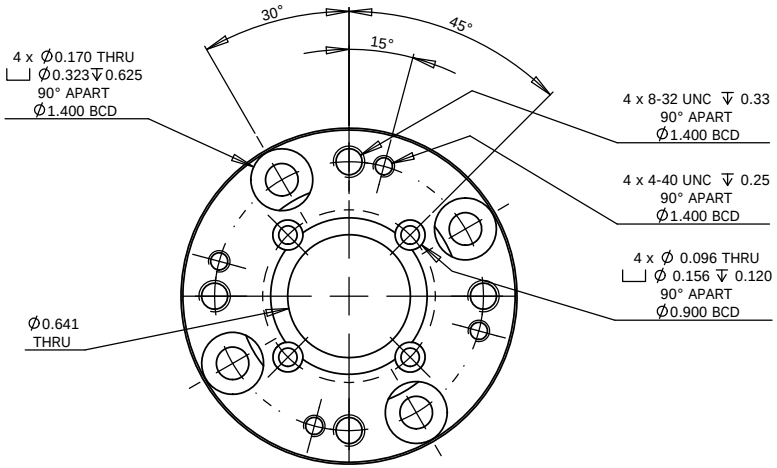

NOTES:

1. REMOVE ALL BURRS & SHARP EDGES
2. BE SURE TO NOTE THE MATERIAL
3. OUTER DIAMETER TO BE MADE IN MATCHED PAIRS WITH "80deg SSDAC CYLINDER"
4. CONCAVE SPHERICAL SURFACE TO BE MADE IN MATCHED PAIRS WITH "80deg SSDAC SPHERICAL SEAT"
5. PART TO BE PROTECTED FROM OXIDATION DURING HEAT TREATMENT

High Pressure Collaborative Access Team
at the Advanced Photon Source

UNLESS OTHERWISE SPECIFIED:			TITLE: 80deg SSDAC piston
DIMENSIONS: INCH		NAME / DATE	
	DRAWN	ER / 12-19-15	
	CHECKED		
	COMMENTS:		
MATERIAL: VASCOMAX C-350 Hardened Rc-55			SIZE C / DWG. NO. / REV A
DO NOT SCALE DRAWING			SCALE: 2:1 / SHEET 1 OF 1

PROPRIETARY AND CONFIDENTIAL
THE INFORMATION CONTAINED IN THIS DRAWING IS THE SOLE PROPERTY OF HPCAT. ANY REPRODUCTION IN PART OR AS A WHOLE WITHOUT THE WRITTEN PERMISSION OF HPCAT IS PROHIBITED.