REVISIONS					
ECN	ZONE	REV.	DESCRIPTION	DATE	APPROVED
		01	FOR CUSTOMER APPROVAL	4/7/2016	MNOVIKOV
		02	DIMENSIONS ADDED, TAPPED HOLE CALLOUTS CHANGED, GRANITE HEIGHT REDUCED	4/15/2016	MNOVIKOV

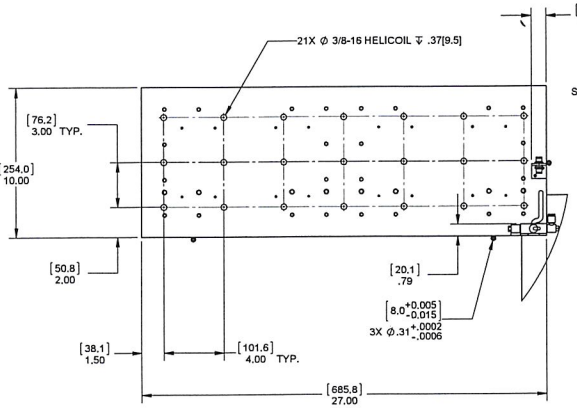

DETAIL A
SCALE 1 : 4

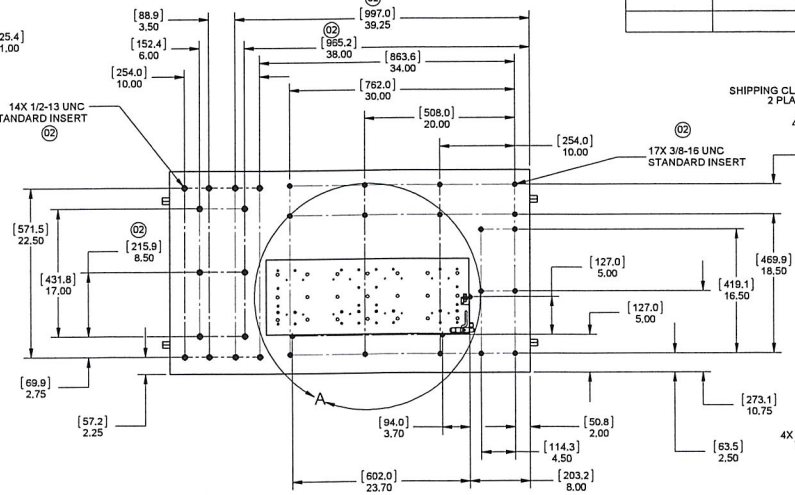

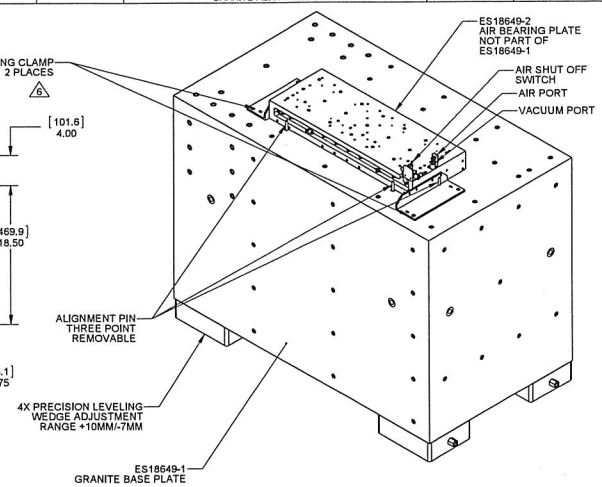

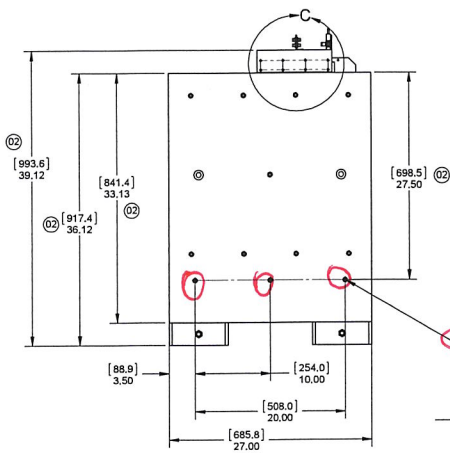

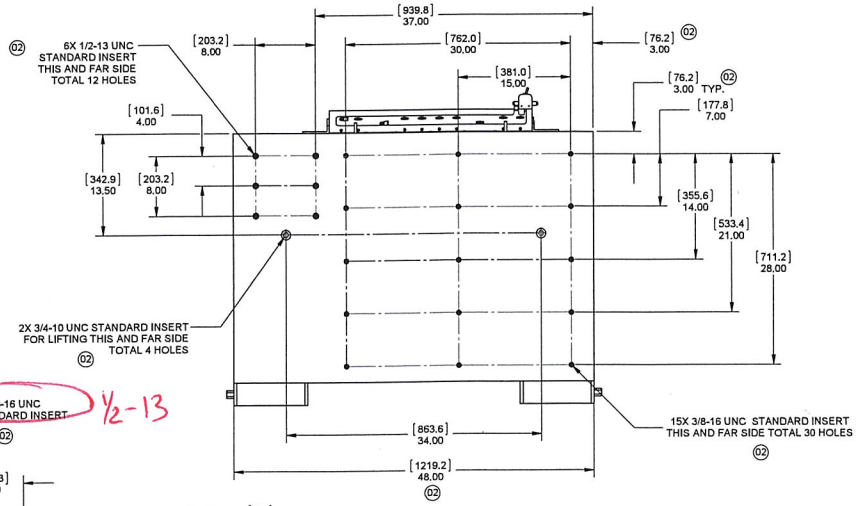

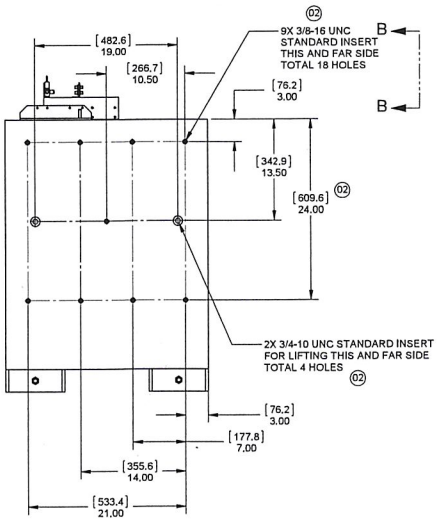

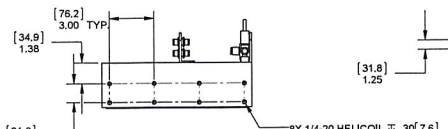

DETAIL C
SCALE 1 : 4

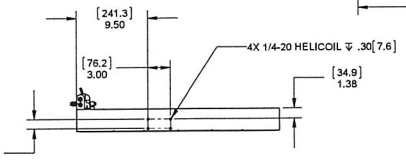

VIEW B-B

NOTES:

1. DIMENSIONS IN THE FORM OF ENGLISH [METRIC].
2. SOME ITEMS OMITTED FROM VIEWS FOR CLARITY.
3. AIR SUPPLY MUST BE CLEAN AND DRY TO 0°F DEWPOINT AND FILTERED TO 0.25um OR BETTER; RECOMMEND NITROGEN @ 99.9% PURITY
4. SURFACES OF CUSTOMER LOAD MOUNTING TO AIR BEARING STAGES MUST BE FLAT TO 0.0002"
5. PRELIMINARY OUTLINE, DIMENSIONS SUBJECT TO CHANGE PENDING APPROVAL.
6. ES18649-1 AND ES18649-2 TO SHIP TOGETHER

THIRD ANGLE PROJECTION

LINEAR UNITS: INCH
ANGULAR UNITS: DEGREES

TOLERANCES UNLESS OTHERWISE SPECIFIED:
LINEAR: 0.X ±.1; 0.XX ±.01; 0.XXX ±.005
FRACTIONAL AND STOCK (STK): 0 TO 6 ±1/32; 6 AND UP ±1/16
ANGULAR: 0.X ±.1; 0.XX ±.02; 0.XXX ±.005
DRILLED, TAPPED, AND COUNTERBORED HOLE DEPTH: +1/2 -0
SURFACE FINISH (Ra) UNLESS OTHERWISE SPECIFIED:

MATERIAL:
OUTSIDE SERVICE:

PROPRIETARY AND CONFIDENTIAL
THE INFORMATION CONTAINED IN THIS DRAWING IS THE SOLE PROPERTY OF AEROTECH. ANY REPRODUCTION IN PART OR AS A WHOLE WITHOUT THE WRITTEN PERMISSION OF AEROTECH IS PROHIBITED.

APPROVALS	NAME	DATE
DRAWN	MNOVIKOV	07-APR-16
CHECK	TBYRNE	07-APR-16
APPR.	MNOVIKOV	07-APR-16

DRAWING FILENAME: ES18649
MODEL FILENAME (IF APPLICABLE): ES18649-1

AEROTECH, INC.
101 ZETA DRIVE
PITTSBURGH, PA 15238
(412)963-7470 FAX: (412)963-7459
WWW.AEROTECH.COM

PART DESCRIPTION: GRANITE BASE PLATE
PART NUMBER: ES18649-1, ES18649-2
SIZE: D | DRAWING NUMBER: ES18649 | REV. 02
MASS: 2088.51 kg | SCALE: 1:8 | SHEET 1 OF 1