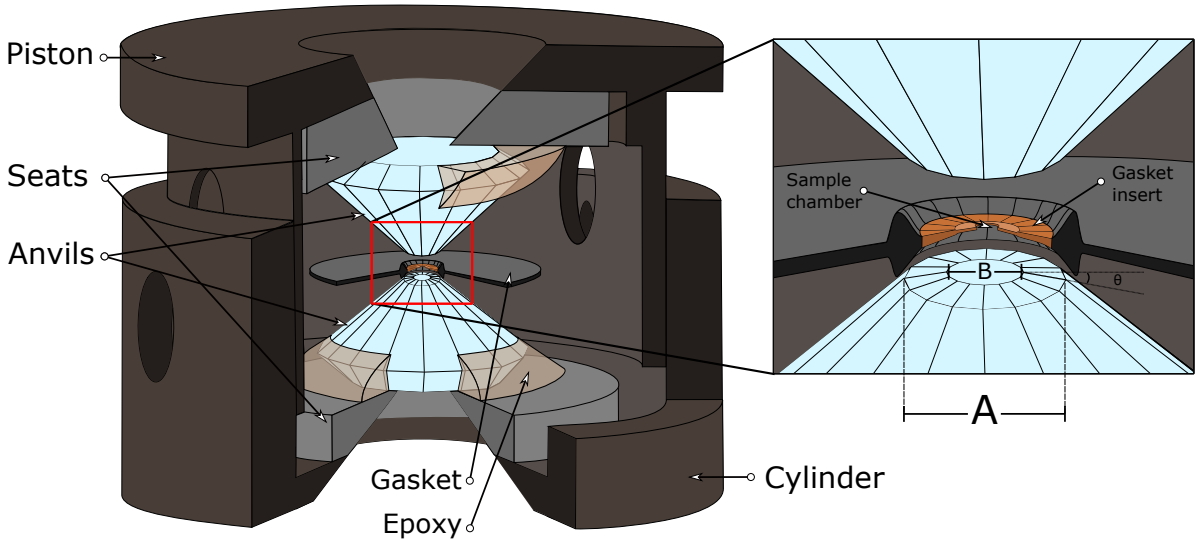
Piston
Seats
Anvils
Gasket
Epoxy
Cylinder
Sample chamber
Gasket insert
B
θ
A