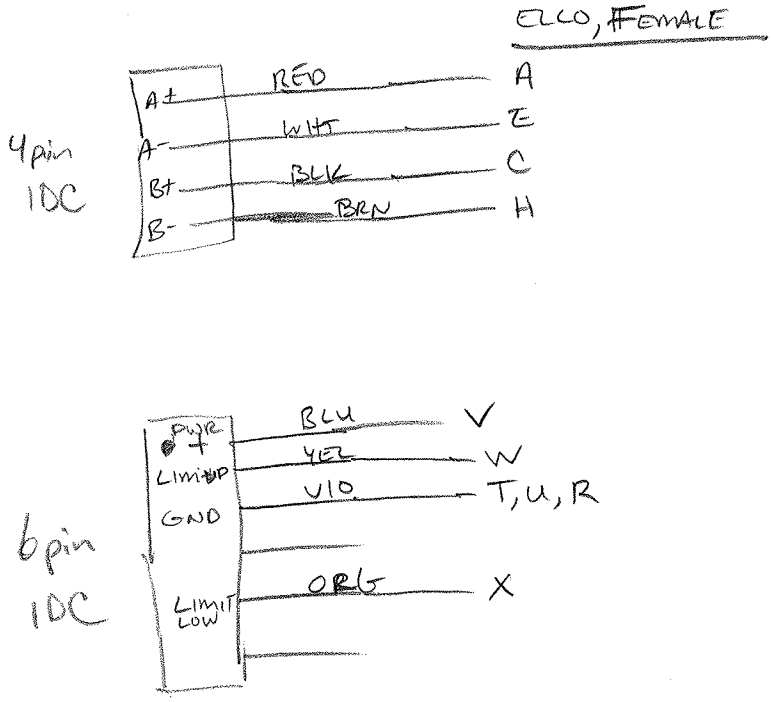CONTROLLER TO ELCO (MTR) + (LMT) CONNECTIONS