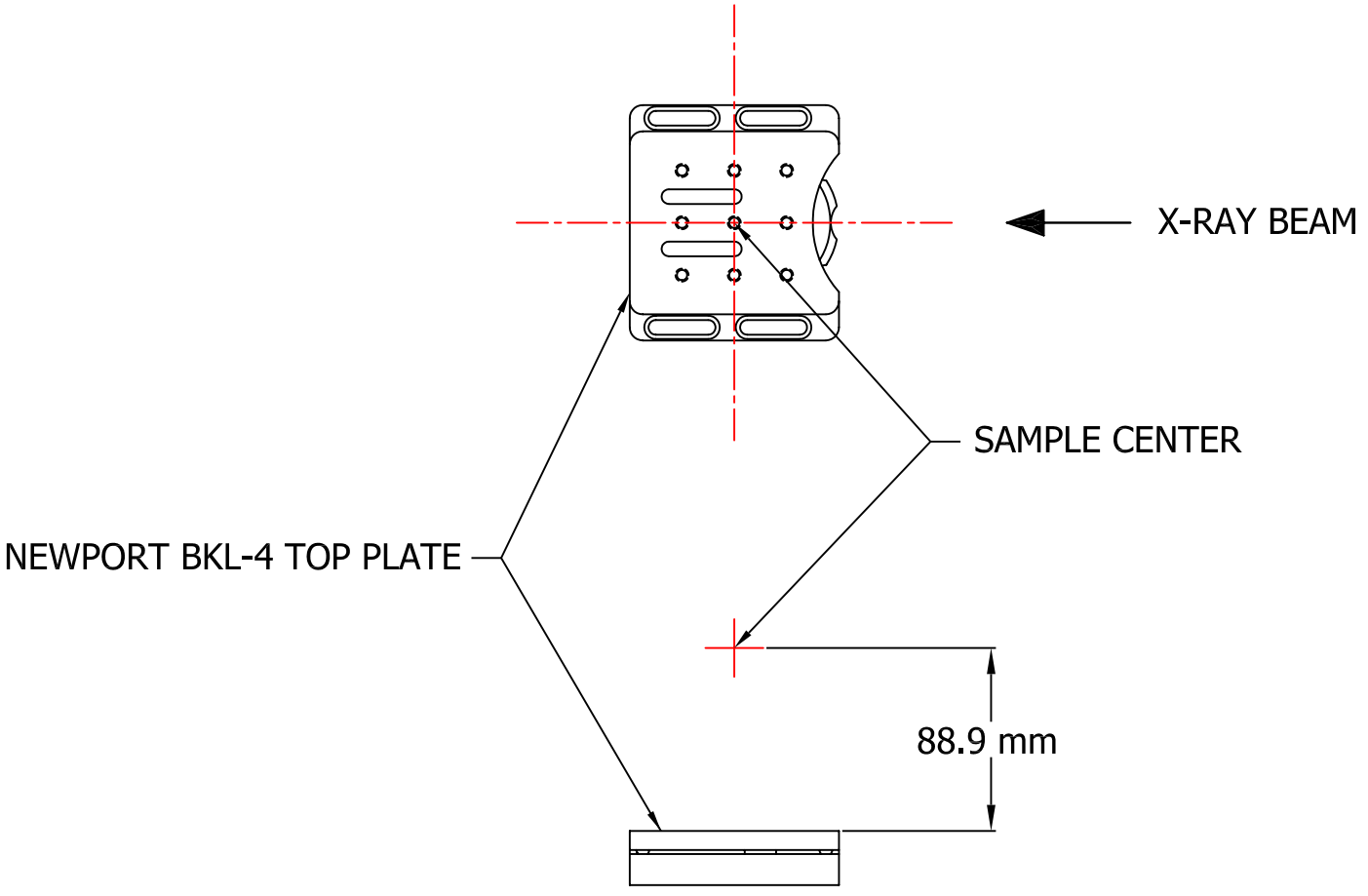

16ID-B SAMPLE HEIGHT